REVISION HISTORY				
ZONE	REV	DESCRIPTION	DATE	APP'D

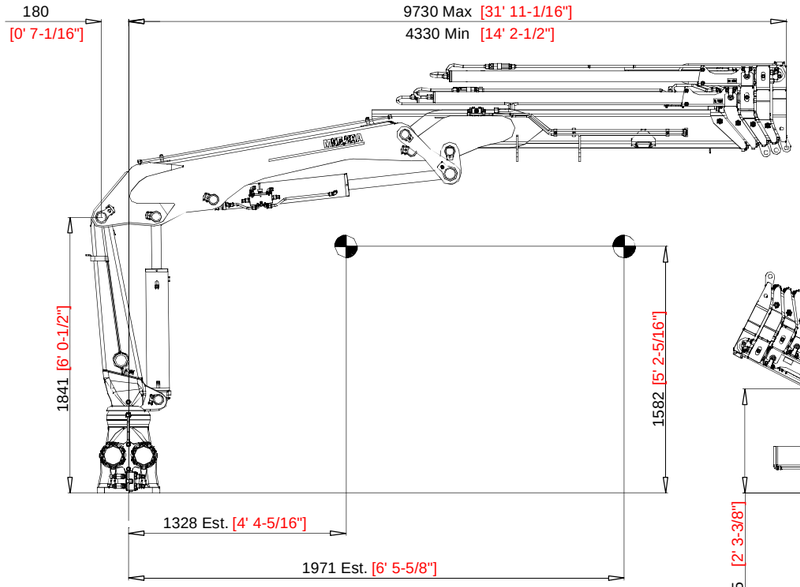

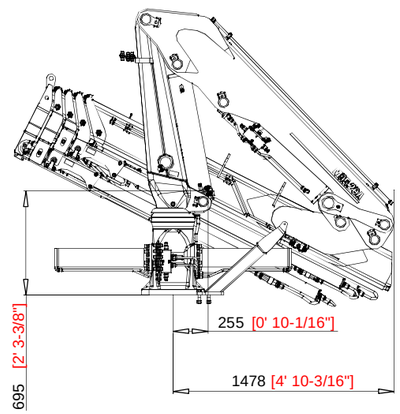

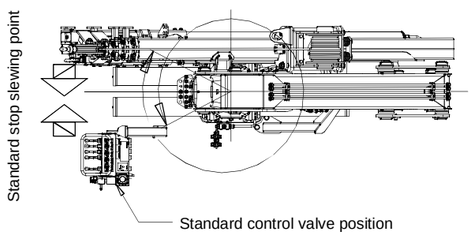

Positions Diagram (1:60 Scale)

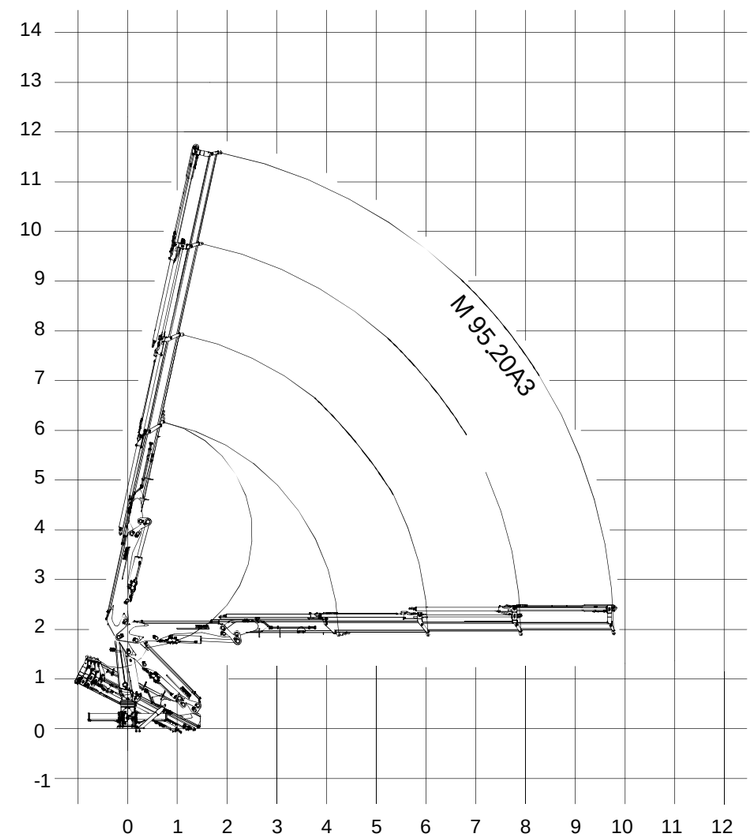

Technical Data

Gross Lifting Moment	116.2 kNm [85704.59 Lbf FT]
Maximum Lifting Dynamic Moment	124.2 kNm [91605.08 Lbf FT]
Max Hydraulic Horizontal Outreach	9.7 m [32' 9-7/8"]
Slewing Angle	415°
Max Rotational Torque	22.4 kNm [16521 LBf FT]
Recommeded Volume of Oil in Tank	45 L [11.88 Gallons]
Max Working Oil Pressure	240 bar [3481 PSI]
Recommended Pump Delivery	35 L/min [9.25 Gallons/Min]
Electrical Power Requirement	14.0 kW / 19.0 CV
Weight of Standard Crane	1450 kg [3197 LBF]

Mounting Base Installation

Quantity of Bolts Required	12
Thread Pitch and Class	M24 x 200 Class 10.9

Standard Features

Built according to DIN 15018-H1-B3 standards.
Crane structure is sandblasted and metallized.
Double coat of primer and two layers of paint.
Special cylinders with Ni-Cr piston rods for marine environments.
Female fittings in stainless steel, and male fittings in carbon steel.
Stainless steel hydraulic installation pipes.
Hoses with rubber "Type A" double coat.
Wheel-rack slewing system, via cylinders, with bronze bushings.
Safety valves on the cylinders.
Hydraulic load limiter.
Emergency stop button.

Optional Features

Hydraulic winch
Manual extensions
Remote control
Auxiliary hydraulic intakes
Cab

Mounting Base Dimensions (1:10 Scale)

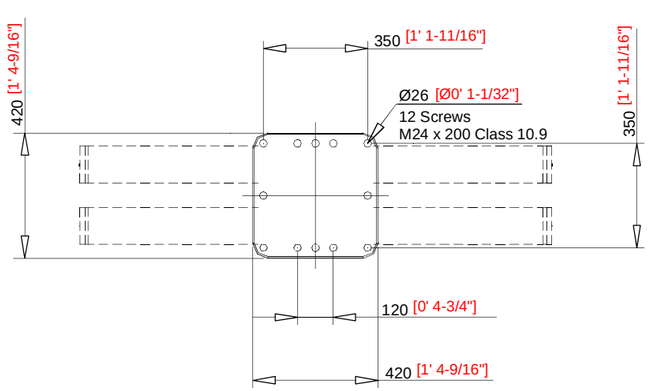

Load Chart (NTS)

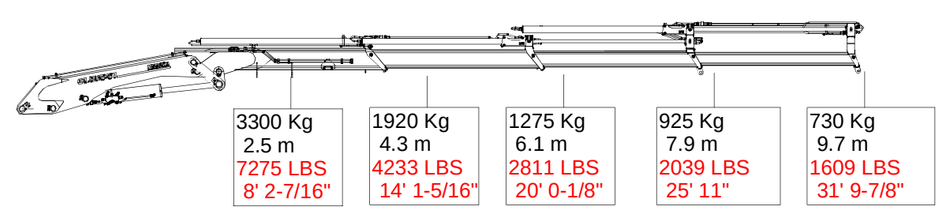

UNLESS OTHERWISE SPECIFIED:
DIMENSIONS ARE IN MILLIMETERS
TOLERANCES:
FRACTIONAL ±
ANGULAR: MACH ± BEND ±
TWO PLACE DECIMAL ±
THREE PLACE DECIMAL ±
INTERPRET GEOMETRIC TOLERANCING PER:
FINISH
FIRST ANGLE PROJECTION

	NAME	DATE
DRAWN	RJS	8/30/13
CHECKED	MR	9/1/13
ENG APPR.		
MFG APPR.		
Q.A.		

COMMENTS:

DMW MARINE GROUP, LLC
CHESTER SPRINGS, PA

TITLE:
MODEL M95.20A3
MARINE CRANE

SIZE	DWG. NO.	REV
D	DMG M95.20A3	–

SCALE=1:20 WEIGHT: 1450 Kg SHEET 1 OF 1

D DMG M95.20A3 REV 1